CSEC Mathematics

January 2015 – Paper 2

Solutions

Kerwin Springer

Best Online Lessons in the Caribbean
WhatsApp **+1868-310-1306** for more information

SECTION I

Answer ALL questions in this section.

All working must be clearly shown.

1. (a) Using a calculator, or otherwise, calculate the EXACT value of

$(12.8)^2 - (30 \div 0.375)$ [3]

Using a calculator,

$(12.8)^2 - (30 \div 0.375)$

$= 163.84 - 80$

$= 83.84$ [Exact value]

(b) Mark spends $\frac{3}{8}$ of his monthly income on housing. Of the REMAINDER, he spends $\frac{1}{3}$ on food and saves what is left.

(i) Calculate the fraction of his monthly income spent on food. [2]

Amount spent on housing $= \frac{3}{8}$

Remainder $= 1 - \frac{3}{8}$

$= \frac{8}{8} - \frac{3}{8}$

$= \frac{5}{8}$

Kerwin Springer

$$\text{Amount spent on food} = \frac{1}{3} \times \frac{5}{8}$$

$$= \frac{5}{24}$$

(ii) Calculate the fraction of his monthly income that he saved. [2]

$$\text{Amount saved} = 1 - \left(\frac{3}{8} + \frac{5}{24}\right)$$

$$= 1 - \left(\frac{9+5}{24}\right)$$

$$= 1 - \left(\frac{14}{24}\right)$$

$$= \frac{24}{24} - \frac{14}{24}$$

$$= \frac{10}{24}$$

$$= \frac{5}{12}$$

(c) (i) At Bank A, US$1.00 = BD $1.96. Calculate the value of US$700 in BD$. [2]

$$US\ \$1 = BD\ \$1.96$$

$$US\ \$700 = BD\ \$\ (1.96 \times 700)$$

$$= BD\ \$1372$$

Kerwin Springer

(ii) At Bank B, the value of US$700 is BD$1 386.

Calculate the value of US$1.00 in BD$ at this bank. [2]

$$US\ \$700 = BD\$\ 1386$$

$$US\ \frac{\$700}{700} = BD\$\ \frac{1386}{700}$$

$$US\ \$1 = BD\$\ 1.98$$

Total: 11 marks

Kerwin Springer

2. (a) Simplify $p^3q^2 \times pq^5$ [2]

$p^3q^2 \times pq^5$

$= p^{3+1}q^{2+5}$

$= p^4q^7$

(b) Express as a single fraction in its simplest form

$\frac{a}{5} + \frac{3a}{2}$ [2]

$\frac{a}{5} + \frac{3a}{2}$

$= \frac{2a + 15a}{10}$

$= \frac{17a}{10}$

(c) Factorize completely:

(i) $x^2 - 5x + 4$ [2]

$x^2 - 5x + 4$

$= x^2 - 1x - 4x + 4$

$= x(x - 1) - 4(x - 1)$

$= (x - 4)(x - 1)$

Kerwin Springer

(ii) $m^2 - 4n^2$ [2]

$m^2 - 4n^2$

$= (m)^2 - (2n)^2$ [Difference of two squares]

$= (m - 2n)(m + 2n)$

(d) Solve for x

(i) $2x - 7 \leq 3$ [1]

$2x - 7 \leq 3$

$2x \leq 3 + 7$

$2x \leq 10$

$x \leq \frac{10}{2}$

$x \leq 5$

(ii) If x is a positive integer, list the possible values of x. [1]

If x is a positive integer, then the possible values of x will be:

$x = 1, 2, 3, 4$ or 5

Kerwin Springer

(e) Find the value of $2\pi\sqrt{\frac{l}{g}}$ where $\pi = 3.14$, $l = 0.625$ and $g = 10$. [2]

Substituting $\pi = 3.14$, $l = 0.625$ and $g = 10$ into:

$$2\pi\sqrt{\frac{l}{g}}$$

$$= 2(3.14)\sqrt{\frac{0.625}{10}}$$

$$= 2(3.14)\sqrt{0.0625}$$

$$= 2(3.14)(0.25)$$

$$= 1.57$$

Total: 12 marks

Kerwin Springer

3. (a) In a survey of 30 families, the findings were that:

15 families owned dogs

12 families owned cats

x families owned BOTH dogs and cats

8 families owned NEITHER dogs NOR cats

(i) Given that:

$U = \{\text{families in the survey}\}$

$C = \{\text{families who owned cats}\}$

$D = \{\text{families who owned dogs}\}$

Using the given information, copy and complete the Venn diagram below.

[4]

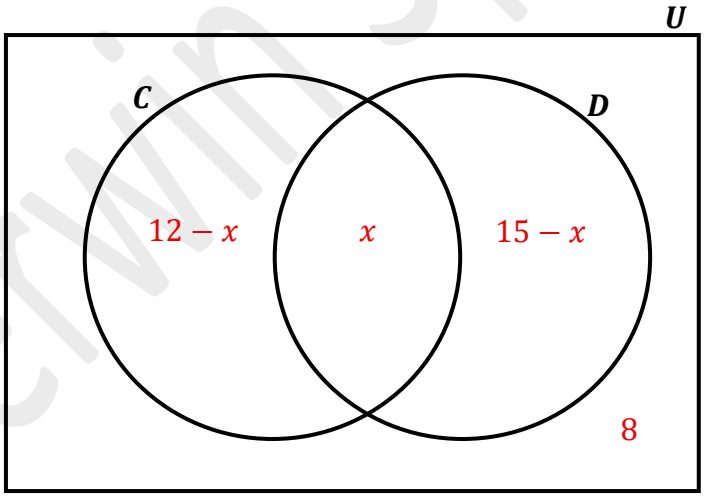

Kerwin Springer

(ii) Write an expression, in x, which represents the TOTAL number of families in the survey. [1]

Total number of families $= (12 - x) + (x) + (15 - x) + 8$

$= 12 - x + x + 15 - x + 8$

$= 12 + 15 - x + 8$

$= 35 - x$

$\therefore$ The expression which represents the total number of families in the survey is $35 - x$.

(iii) Write an equation which may be used to solve for x. [1]

Since 30 families were surveyed, then the equation which represents the total number of families in the survey will be:

$35 - x = 30$

Kerwin Springer

(b) The diagram below, not drawn to scale, shows parallelogram $ABCD$.

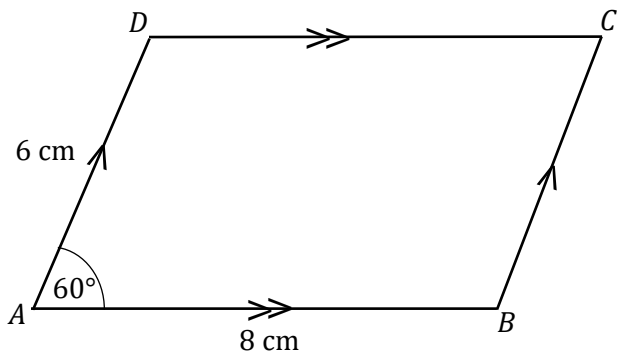

Using **a ruler**, **a pencil** and **a pair of compasses only**, construct a parallelogram $ABCD$ with $AB = 8$ cm, $AD = 6$ cm and $\angle DAB = 60°$.

Marks will be awarded for construction lines clearly shown. [6]

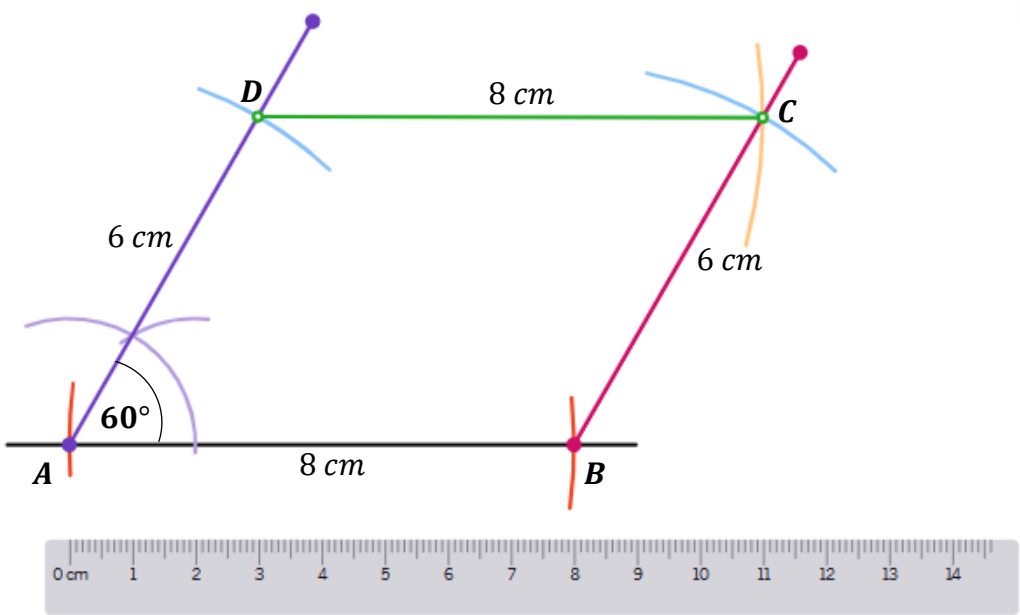

Total: 12 marks

4. An electrician charges a fixed fee for a house visit plus an additional charge based on the length of time spent on the job.

The total charges, y, are calculated using the equation $y = 40x + 75$, where x represents the time in hours spent on the job.

(a) Complete the table of values for the equation $y = 40x + 75$. [2]

x (time in hours)	0	1	2	3	4	5	6
y (total charges in \$)	75	115	155	195	235	275	315

$y = 40x + 75$

When $x = 2$,

$y = 40(2) + 75$

$= 80 + 75$

$= 155$

When $x = 4$,

$y = 40(4) + 75$

$= 160 + 75$

$= 235$

Kerwin Springer

(b) On graph paper, using a scale of 2 cm to represent one hour on the x-axis and 2 cm to represent 50 dollars on the y-axis, plot the 7 pairs of values shown in your completed table. Draw a straight line through all plotted points. [5]

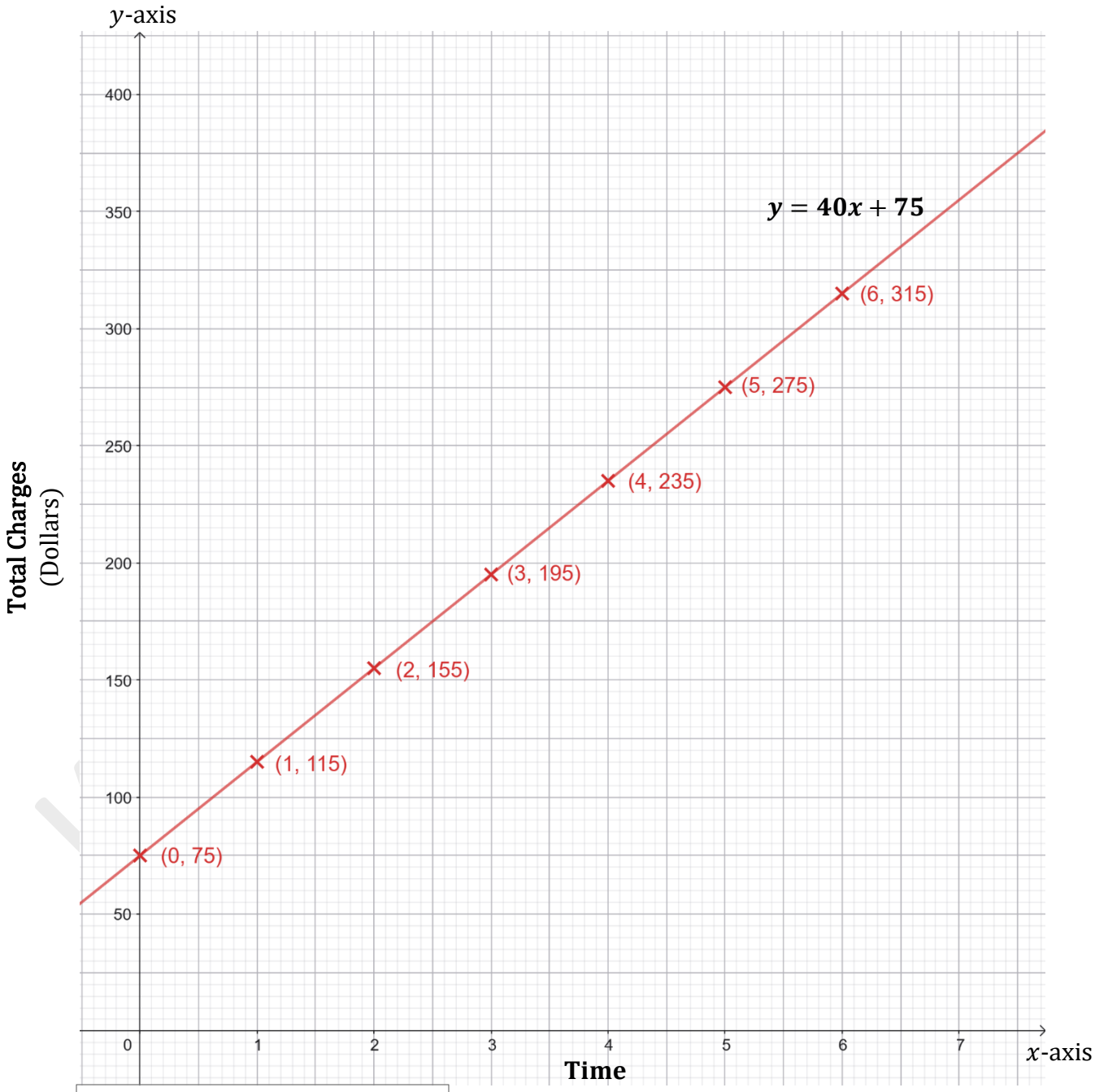

Scale used:
x-axis: 2cm represents 1 hour
y-axis: 2cm represents \$50

(c) Using your graph, determine,

(i) the total charges when the job took 4.5 hours [2]

Reading off the graph, when the job took 4.5 hours, the total charges were \$255.

The lines were drawn on the graph (on the next page) showing that when $x = 4.5, y = 255$.

(ii) the time, in hours, spent on a job if the total charges were \$300 [2]

Reading off the graph, if the total charges were \$300, then the time spent on the job was 5.6 hours.

The lines were drawn on the graph (on the next page) showing that when $y = 300, x = 5.6$.

(iii) the fixed charges for a visit [1]

The fixed fee can be found by reading off the graph when the Time, $x = 0$. Therefore, the fixed charge for a visit is \$75.

Draw lines on your graph to show how the values for c(i) and c(ii) were obtained.

Kerwin Springer

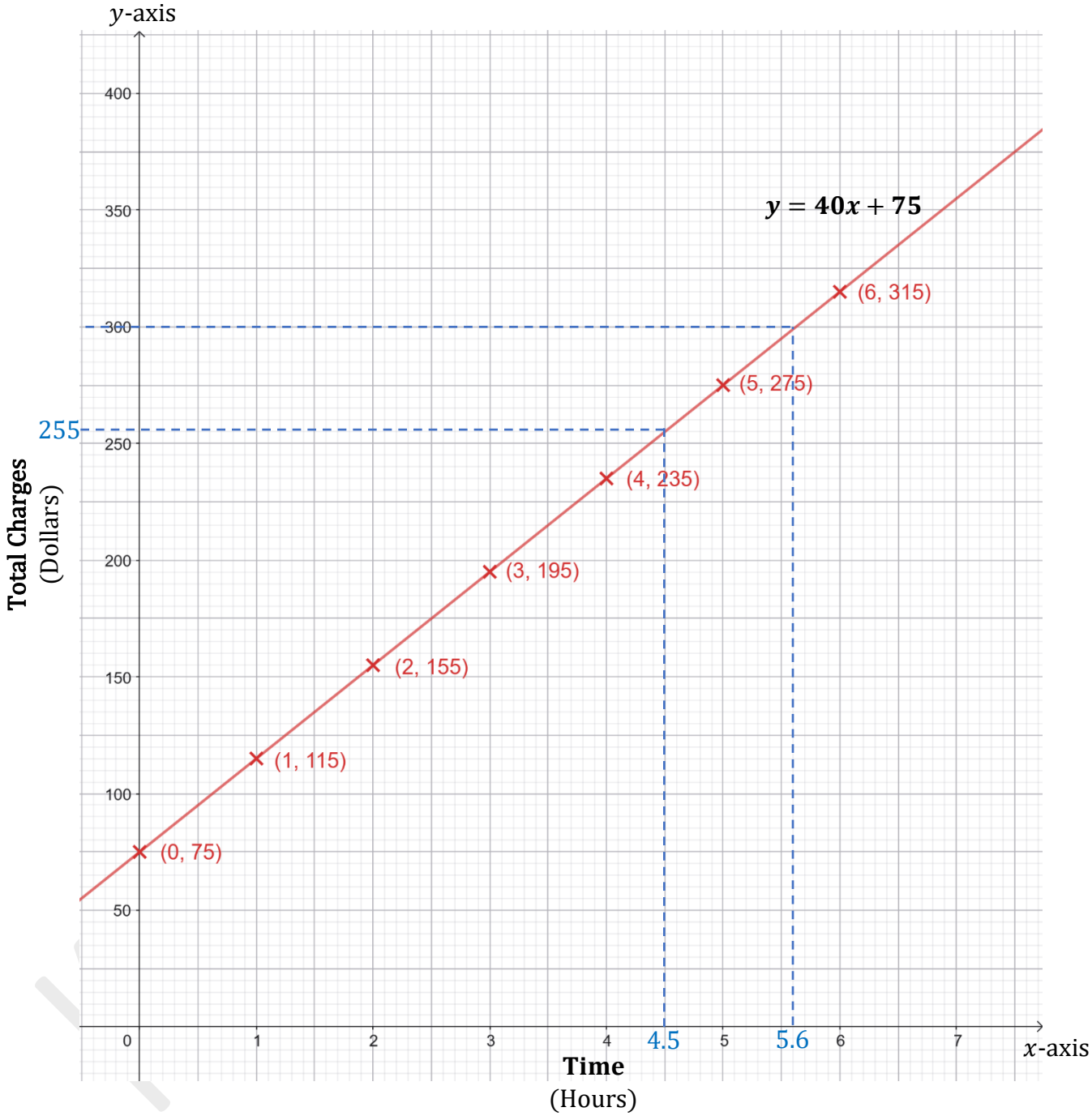

Total: 12 marks

5. The diagram below shows ΔLMN and its image ΔPQR after a transformation.

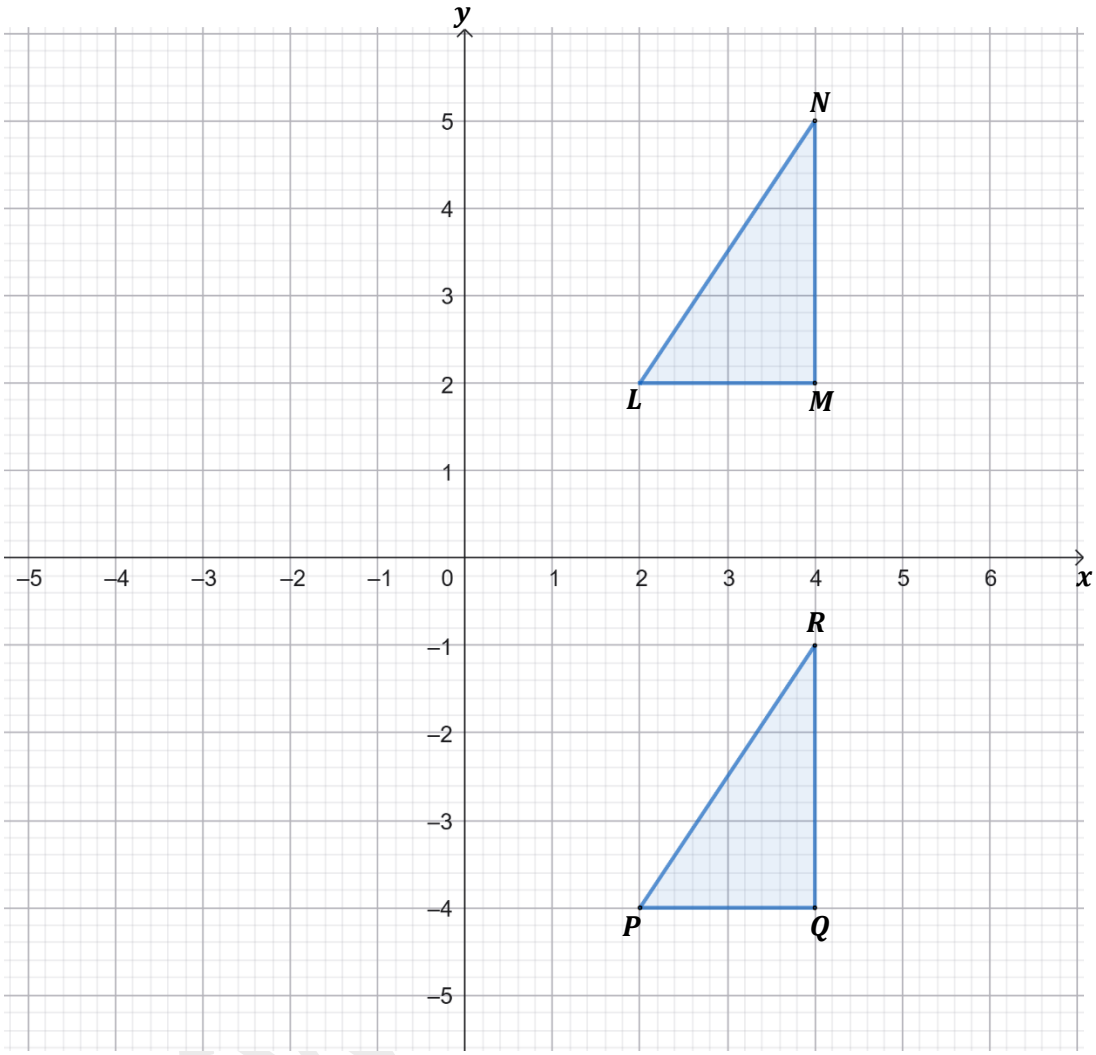

(i) Write down the coordinates of N [1]

The corrdinates of N is $(4, 5)$.

(ii) On the grid above, draw ΔFGH, the reflection of ΔLMN in the y-axis. [4]

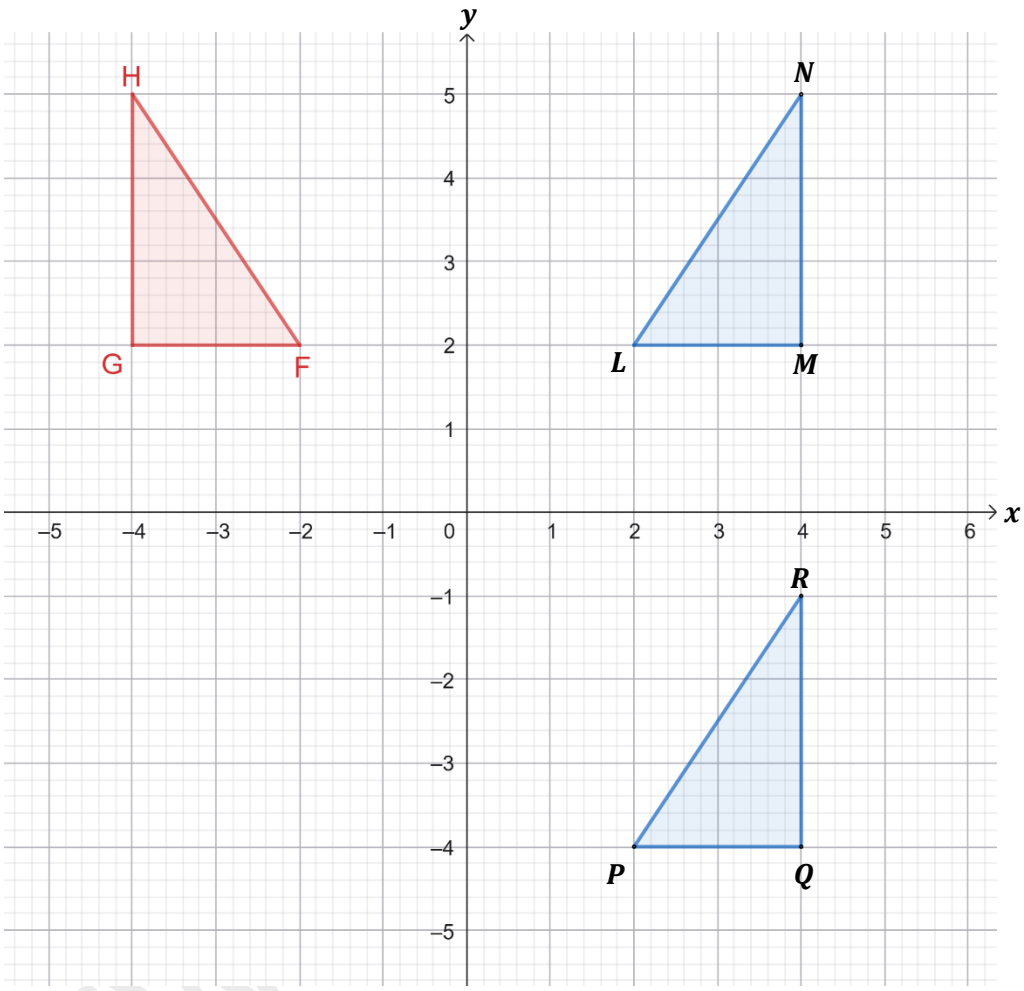

(iii) Using vector notation, describe the transformation which maps ΔLMN onto ΔPQR. [2]

The transformation which maps ΔLMN onto ΔPQR is a Translation which is described by $T = \begin{pmatrix} 0 \\ -6 \end{pmatrix}$.

In Vector notation:

$P\begin{pmatrix} 2 \\ -4 \end{pmatrix} - L\begin{pmatrix} 2 \\ 2 \end{pmatrix} = \begin{pmatrix} 0 \\ -6 \end{pmatrix}$

$Q\begin{pmatrix}4\\-4\end{pmatrix} - M\begin{pmatrix}4\\2\end{pmatrix} = \begin{pmatrix}0\\-6\end{pmatrix}$

$R\begin{pmatrix}4\\-1\end{pmatrix} - N\begin{pmatrix}4\\5\end{pmatrix} = \begin{pmatrix}0\\-6\end{pmatrix}$

(iv) Complete the following statement: [3]

ΔPQR is mapped into ΔFGH by a combination of two transformations. First, ΔPQR is mapped onto ΔLMN by a ……translation of +6 units…… , parallel to the ……y-axis…… ; then ΔLMN is mapped into ΔFGH by a ……reflection…… in the ……y-axis…… .

(v) ΔPQR and ΔFGH are congruent.

State TWO reasons why they are congruent. [2]

Two reasons why they are congruent include:

1. The corresponding sides of each triangle have the same length. ($PQ = GF, QR = GH, PR = FH$)
2. The corresponding angles of each triangle are the same. ($\hat{Q} = \hat{G} = 90°$)

Total: 12 marks

Kerwin Springer

6. (a) The diagram below is a scale drawing of the side view of a building. Q is the midpoint of KN, and $\angle KLM = \angle LMN = 90°$.

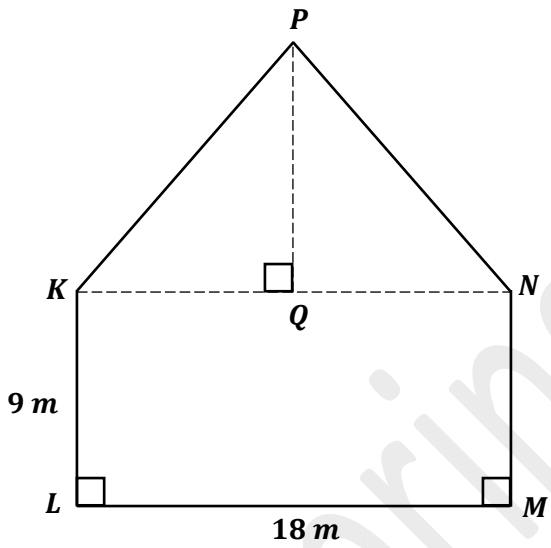

(i) Measure and state the length of PQ in the drawing. [1]

$PQ =$ .....3.5 cm.....

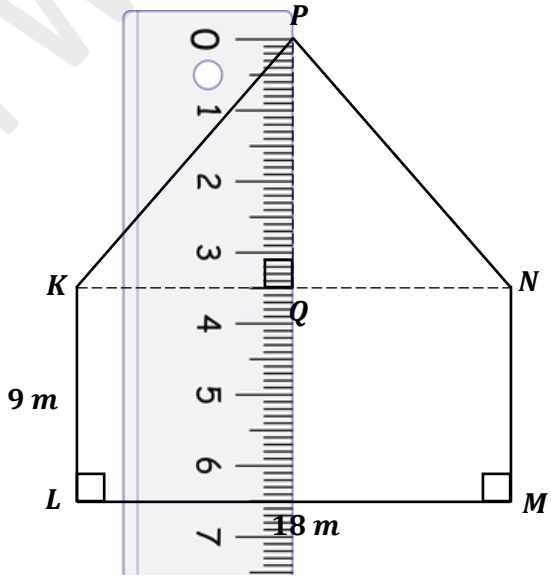

Kerwin Springer

(ii) Determine the scale of the drawing. [2]

The scale is 1: 1300

Using a ruler, $LM = 6cm$ (on the diagram).

The actual length of $LM = 18m$

$\therefore 6cm \equiv 18m$

$= 18 \times 100\ cm$

$= 1800\ cm$

$\therefore$ The scale on the drawing is $6 : 1800$

$= 1 : 300$

Kerwin Springer

(iii) Calculate the actual area of the face $LMNPK$ on the building. [4]

Area of PKN (Triangle)

$$= \frac{base \times height}{2}$$

$$= \frac{18m \times 10.5m}{2}$$

$$= 94.5\ m^2$$

NOTE: The height of the triangle (on the diagram) was 3.5 cm. Since the scale is 1:300, the actual height of the triangle is:

$3.5\ cm \times 300\ cm = 1050\ cm$

Converting to metres, the actual height of the triangle is:

$$\frac{1050}{100} = 10.5\ m$$

Area of KLMN (Rectangle)

$$= length \times width$$

$$= 18m \times 9m$$

$$= 162\ m^2$$

Area of LMNPK $= \text{Area of PKN} + \text{Area of KLMN}$

$$= 94.5\ m^2 + 162\ m^2$$

$$= 256.5\ m^2$$

Kerwin Springer

(b) The diagram below, **not drawn to scale,** shows the plan of a swimming pool in the shape of a rectangle and two semicircles. The rectangle has dimensions 8 metres by 3.5 metres.

$\left[\text{Use } \pi = \frac{22}{7}\right]$

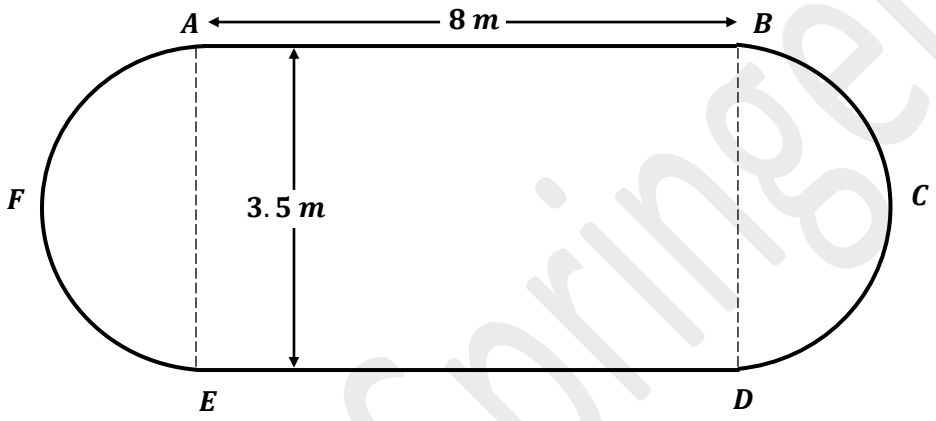

(i) State the length of the diameter of the semicircle, AFE. [1]

The length of the diameter of the semicircle, AFE is 3.5 m.

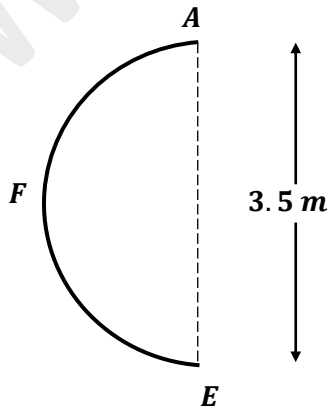

Kerwin Springer

(ii) Calculate the perimeter of the swimming pool. [3]

The arc length of the semicircle, AFE

Substituting $\theta = 180°$, $\pi = \frac{22}{7}$, diameter, $d = 3.5m$ into

$$\frac{\theta}{360} \times \pi \times d$$

$$= \frac{180}{360} \times \frac{22}{7} \times 3.5$$

$$= 5.5m$$

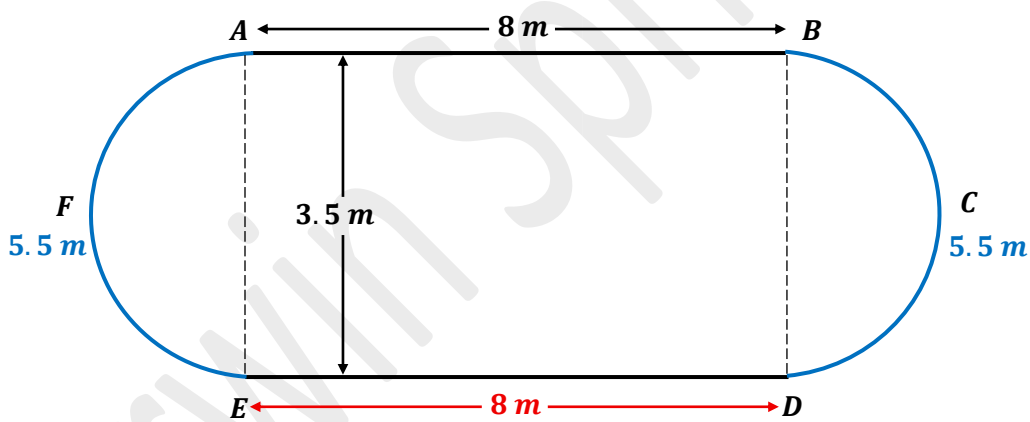

Perimeter of the swimming pool

$= 2(arc\ length) + 8m + 8m$

$= 2(5.5m) + 16m$

$= 11m + 16m$

$= 27m$

Total: 11 marks

Kerwin Springer

7. The masses of 60 parcels collected at a post office were grouped and recorded as shown in the histogram below.

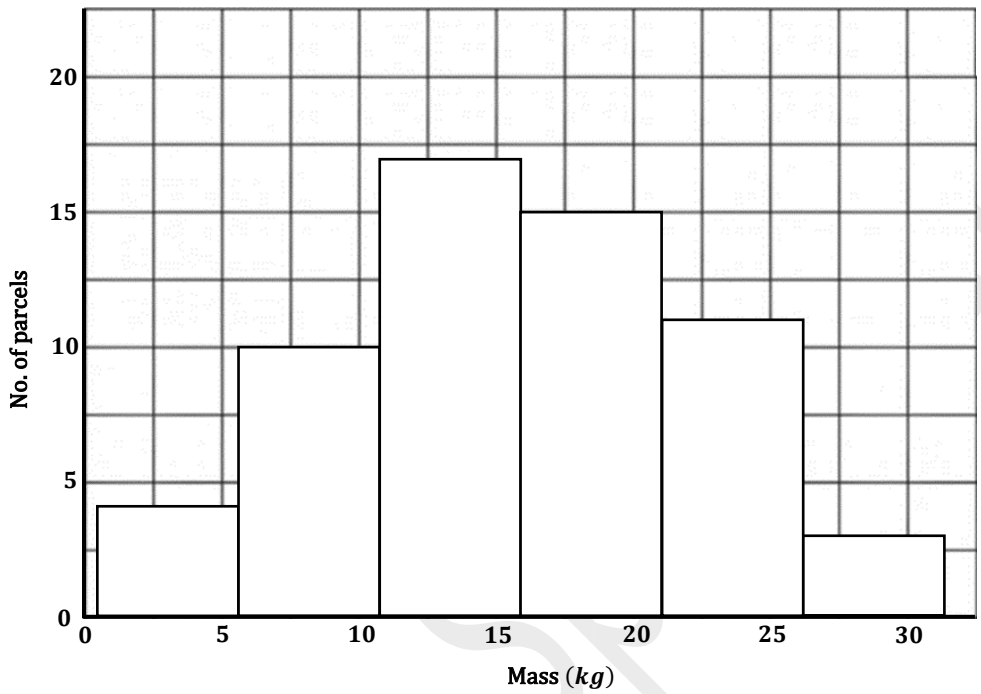

(a) (i) Complete the table below to show the information given in the histogram. [1]

(ii) Complete the column headed "Cumulative Frequency". [1]

Kerwin Sp

Mass (kg)	No. of Parcels	Cumulative Frequency
$1-5$	4	4
$6-10$	10	14
$11-15$	17	31
$16-20$	$46-31=15$	46
$21-25$	11	$46+11=57$
$26-30$	$60-57=3$	60

(b) On the grid provided on page 19, using a scale of **2 cm to represent 5 kg on the x-axis** and **2 cm to represent 10 parcels on the y-axis**, draw the cumulative frequency curve for the data. [5]

Mass (kg)	L.C.B. $\leq m \leq$ U. C. B.	No. of Parcels	Cumulative Frequency (C.F.)	Points to be plotted (U.C.B., C.F.)
$1-5$	$0.5 \leq m < 5.5$	4	4	$(5.5, 4)$
$6-10$	$5.5 \leq m < 10.5$	10	14	$(10.5, 14)$
$11-15$	$10.5 \leq m < 15.5$	17	31	$(15.5, 31)$
$16-20$	$15.5 \leq m < 20.5$	15	46	$(20.5, 46)$
$21-25$	$20.5 \leq m < 25.5$	11	57	$(25.5, 57)$
$26-30$	$25.5 \leq m < 30.5$	3	60	$(30.5, 60)$

Kerwin Springer

Title: Cumulative Frequency Curve Showing The Number of Parcels VS Mass of the Parcels.

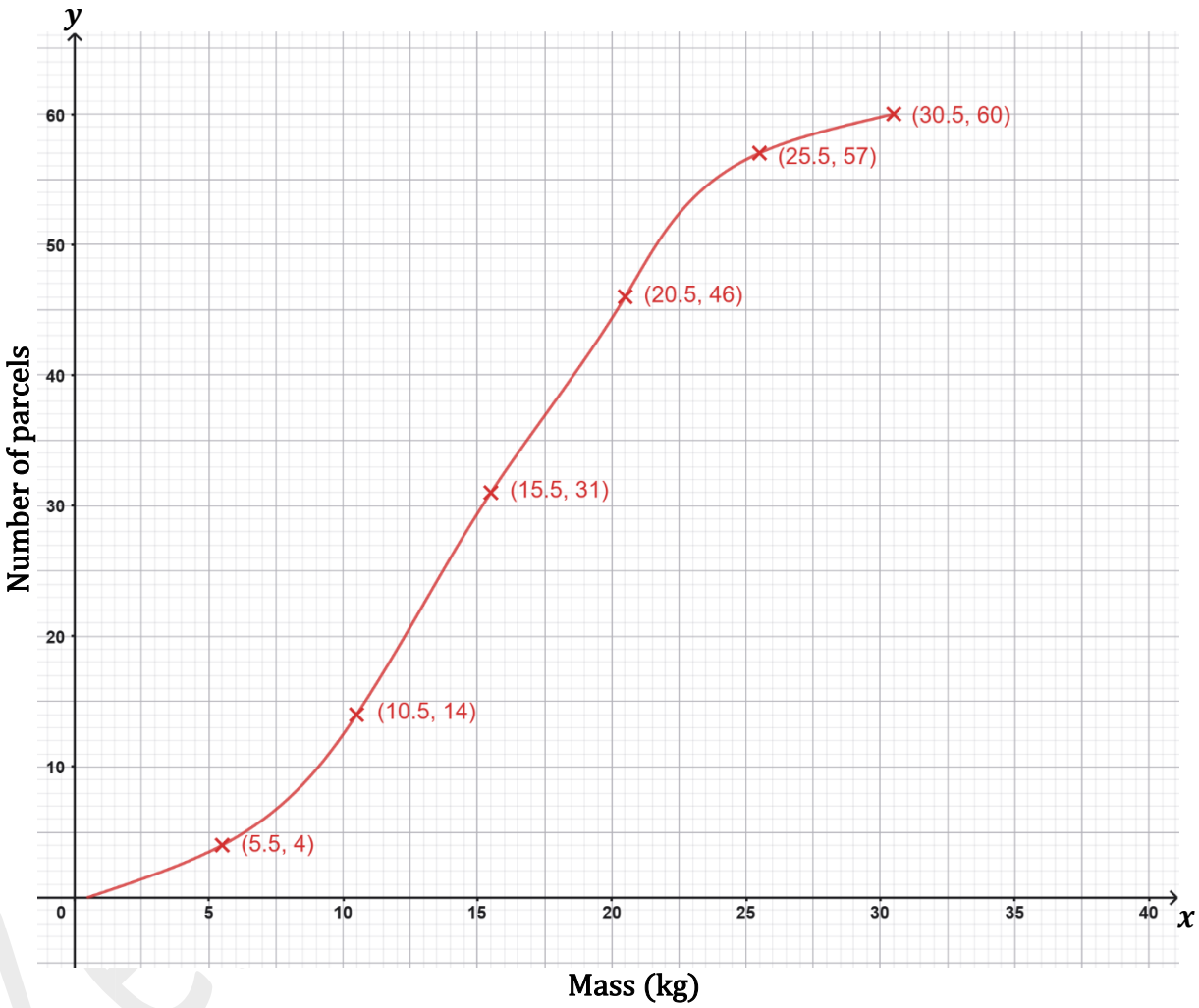

Scale used

x-axis: 2cm represents 5kg

y-axis: 2cm represents 10 parcels

(c) Use the graph drawn at (b) to estimate the median mass of the parcels. [2]

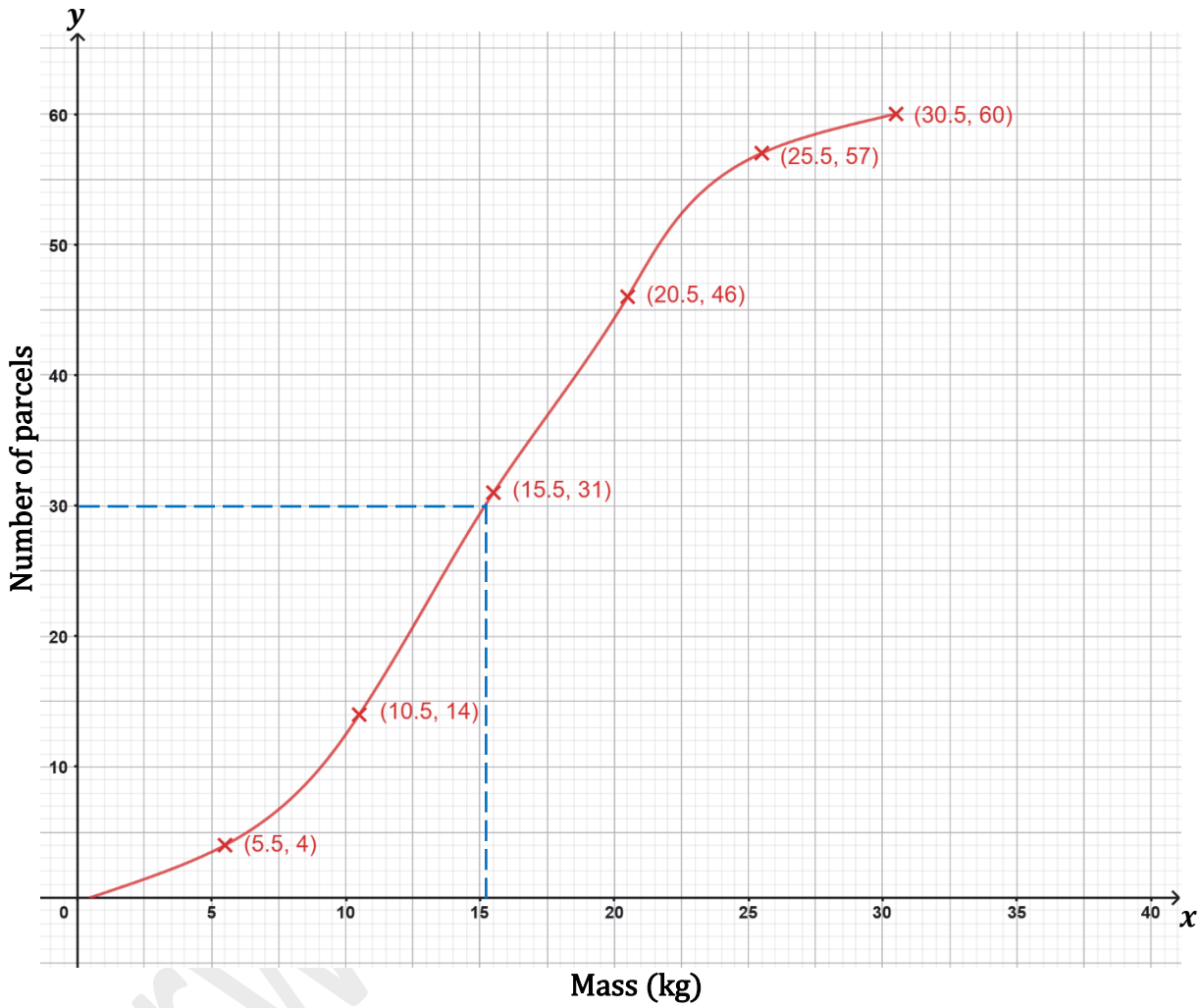

Median number of parcels $= \frac{60}{2}$

$= 30$ parcels

Reading off the graph, the median mass of parcels $= 15.5$ kg

Total: 10 marks

8. The diagram below shows the first three figures in a sequence of figures.

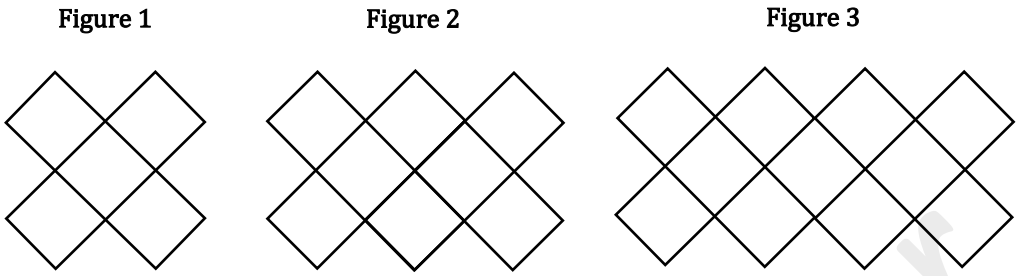

(a) Draw the fourth figure in the sequence. [2]

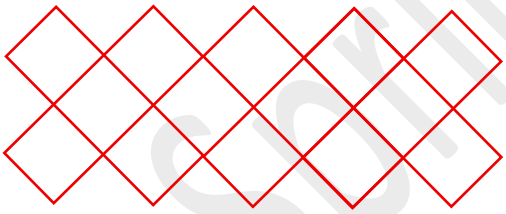

Kerwin Springer

(b) The table below shows the number of squares in each figure. Study the pattern in the table and complete the table by inserting the missing values in the rows numbered (i), (ii), (iii) and (iv).

	Figure (n)	No. of Squares	
	1	5	
	2	8	
	3	11	
(i)	4	14	[1]
(ii)	10	32	[2]
(iii)	16	50	[2]
(iv)	n	$3n + 2$	[3]

Kerwin Springer

(iv) For Figure n, the number of squares $= 3n + 2$.

Explanation:

Figure (n)	No. of Squares
1	5
2	8
3	11

The number of squares increase by 3.

$\therefore$ In terms of n, we can deduce that $Number\ of\ Squares = 3n + k$

[where k is a constant]

Substituting $n = 1$ and $Number\ of\ Squares = 5$ into:

$Number\ of\ Squares = 3n + k$

$5 = 3(1) + k$

$5 = 3 + k$

$5 - 3 = k$

$2 = k$

$k = 2$

We can also substitute $n = 2$ and Number of Squares $= 8$ OR $n = 3$ and Number of Squares $= 11$ to confirm the value of k.

$\therefore$ Number of Squares $= 3n + 2$

Kerwin Springer

(i) When $n = 4$,

$$\text{Number of Squares} = 3(4) + 2$$

$$= 12 + 2$$

$$= 14$$

(ii) When $n = 10$,

$$\text{Number of Squares} = 3(10) + 2$$

$$= 30 + 2$$

$$= 32$$

(iii) Number of Squares $= 50$

$$\text{Number of Squares} = 3n + 2$$

$$50 = 3n + 2$$

$$50 - 2 = 3n$$

$$48 = 3n$$

$$3n = 48$$

$$n = \frac{48}{3}$$

$$n = 16$$

Total: 10 marks

Kerwin Springer

SECTION II

Answer TWO questions in this section.

ALGEBRA AND RELATIONS, FUNCTIONS AND GRAPHS

9. (a) The functions $f(x)$ and $g(x)$ are defined as:

$$f(x) = \frac{5x-4}{3} \qquad g(x) = x^2 - 1$$

(i) Evaluate $f(7)$. [1]

$$f(x) = \frac{5x-4}{3}$$

$$f(7) = \frac{5(7)-4}{3}$$

$$= \frac{35-4}{3}$$

$$= \frac{31}{3}$$

$$= 10\frac{1}{3}$$

Kerwin Springer

(ii) Write an expression, in terms of x, for $f^{-1}(x)$. [2]

$$f(x) = \frac{5x - 4}{3}$$

Let $y = f(x)$

$$y = \frac{5x - 4}{3}$$

Make x the subject of the formula:

$$3y = 5x - 4$$

$$3y + 4 = 5x$$

$$\frac{3y + 4}{5} = x$$

$$x = \frac{3y + 4}{5}$$

Interchange x and y:

$$y = \frac{3x + 4}{5}$$

$$\therefore f^{-1}(x) = \frac{3x + 4}{5}$$

Kerwin Springer

(iii) Write an expression, in terms of x, for $fg(x)$. [2]

$f(x) = \frac{5x-4}{3}$ $\qquad$ $g(x) = x^2 - 1$

$$fg(x) = f[g(x)]$$

$$= f[x^2 - 1]$$

$$= \frac{5(x^2 - 1) - 4}{3}$$

$$= \frac{5x^2 - 5 - 4}{3}$$

$$= \frac{5x^2 - 9}{3}$$

(b) (i) Express the quadratic function $f(x) = 3x^2 + 6x - 2$, in the form $a(x + h)^2 + k$, where a, h and k are constants. [3]

$f(x) = 3x^2 + 6x - 2$

Which is of the form $ax^2 + bx + c$ where $a = 3, b = 6$ and $c = -2$.

$$h = \frac{b}{2a}$$

$$= \frac{6}{2(3)}$$

$$= \frac{6}{6}$$

$$= 1$$

Kerwin Springer

$$k = \frac{4ac - b^2}{4a}$$

$$= \frac{4(3)(-2) - (6)^2}{4(3)}$$

$$= \frac{-24 - 36}{12}$$

$$= \frac{-60}{12}$$

$$= -5$$

$$\therefore\ f(x) = 3x^2 + 6x - 2$$

$$= 3\big(x - (1)\big)^2 + (-5)$$

$$= 3(x - 1)^2 - 5$$

Where

$a = 3, h = 1$ and $k = -5$.

(ii) Hence, or otherwise, state the minimum value of

$f(x) = 3x^2 + 6x - 2.$ [1]

The minimum value of $f(x) = k$

$$= -5$$

Kerwin Springer

(iii) State the equation of the axis of symmetry of the function

$f(x) = 3x^2 + 6x - 2.$ [2]

Axis of symmetry $= -h$

$= -1$

(iv) Sketch the graph of $y = 3x^2 + 6x - 2$, showing on your sketch

(a) the intercept on the y-axis

(b) the coordinates of the minimum point. [4]

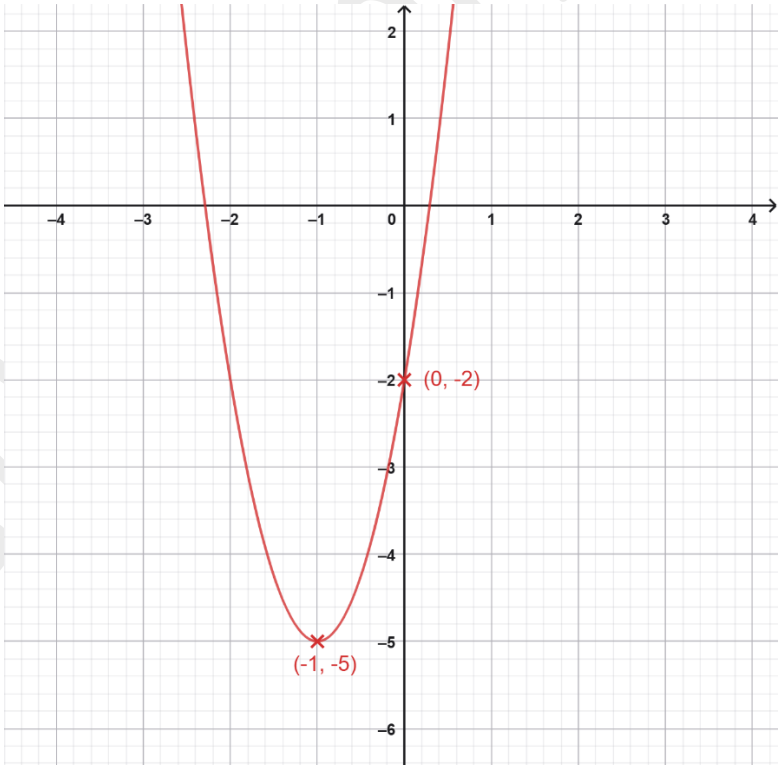

The intercept on the y-$axis$ is $(0, -2)$

The coordinates of the minimum point is $(-1, -5)$

Total: 15 marks

10. (a) On the diagram below, **not drawn to scale**, $RQ = 9\ m$, $RS = 12\ m$, $ST = 13\ m$, $\angle QRS = 60°$ and $\angle SQT = 40°$.

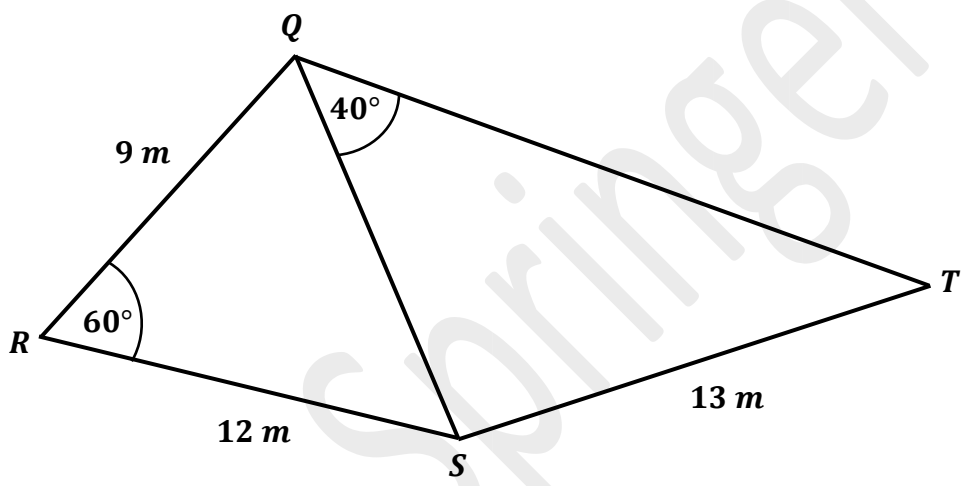

Calculate, correct to 1 decimal place,

(i) the length QS [2]

Using the cosine rule,

$QS^2 = QR^2 + RS^2 - 2(QR)(RS)\cos(Q\hat{R}S)$

$= (9)^2 + (12)^2 - 2(9)(12)\cos(60°)$

$= 81 + 144 - 216\cos(60°)$

$= 117$

Kerwin Springer

$QS = \sqrt{117}$

$= 10.8\ m$ [correct to 1 decimal place]

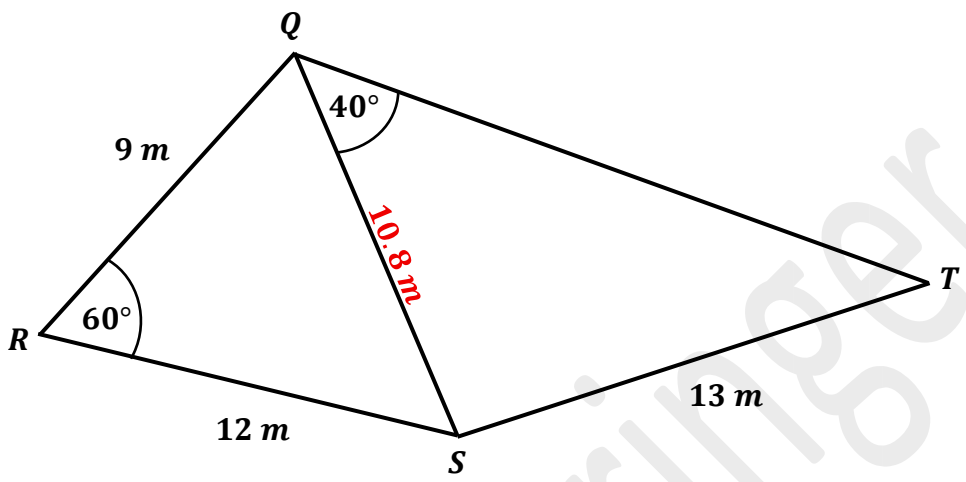

(ii) the measure of $\angle QTS$ [2]

Using the sine rule,

$$\frac{QS}{\sin T} = \frac{ST}{\sin Q}$$

$$\frac{10.8}{\sin T} = \frac{13}{\sin 40°}$$

$$\frac{\sin T}{10.8} = \frac{\sin 40°}{13}$$

$$\sin T = \frac{\sin 40°}{13} \times 10.8$$

$$T = \sin^{-1}\left(\frac{\sin 40°}{13} \times 10.8\right)$$

$T = 32.3°$ [correct to 1 decimal place]

Kerwin Springer

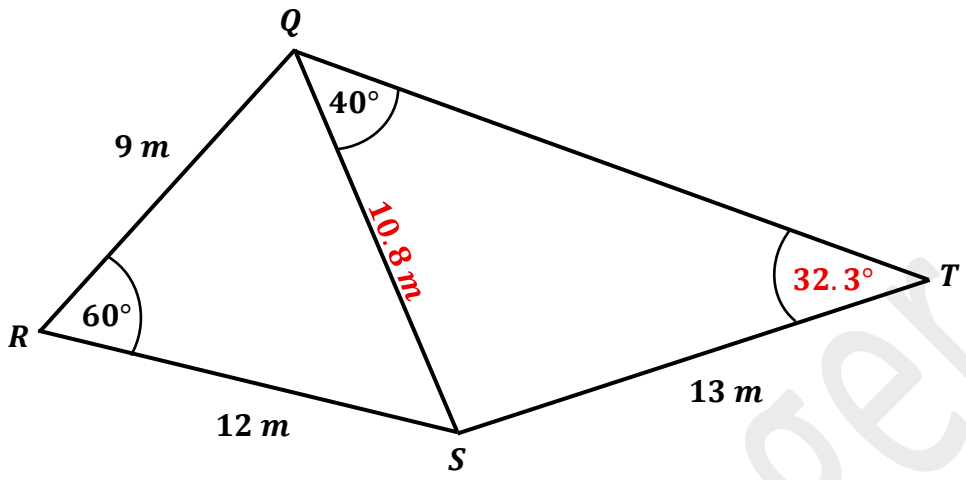

(iii) the area of triangle QRS [2]

Area of triangle QRS

$= \frac{1}{2}(QR)(RS) \times \sin R$

$= \frac{1}{2}(9)(12) \times \sin 60°$

$= 46.8\ m^2$ [correct to 1 decimal point]

Kerwin Springer

(iv) the perpendicular distance from Q to RS [1]

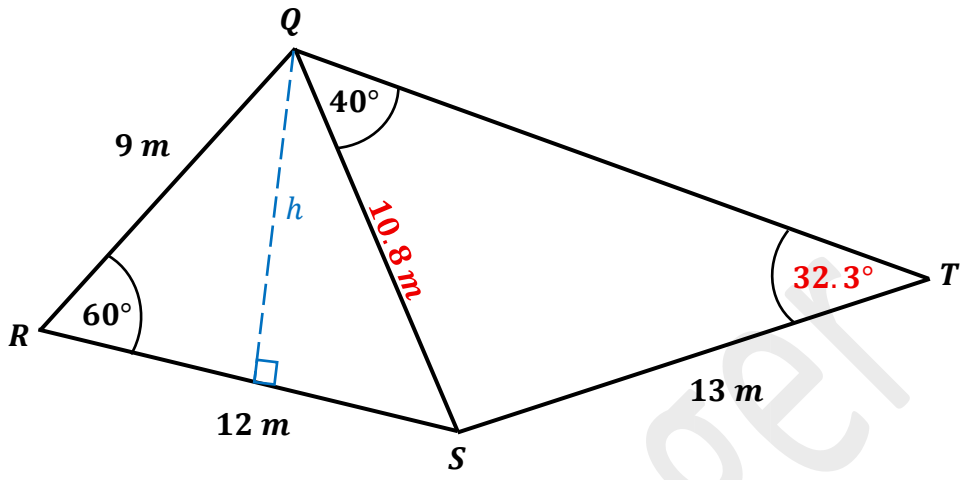

$$\sin R = \frac{opposite}{hypothenuse}$$

$$\sin 60° = \frac{h}{9}$$

$$\sin 60° \times 9 = h$$

$$h = \sin 60° \times 9$$

$h = 7.8m$ [correct to 1 decimal point]

Kerwin Springer

(b) The diagram below, **not drawn to scale**, shows a circle with centre O. HJ and HG are tangents to the circle and $\angle JHG = 48°$.

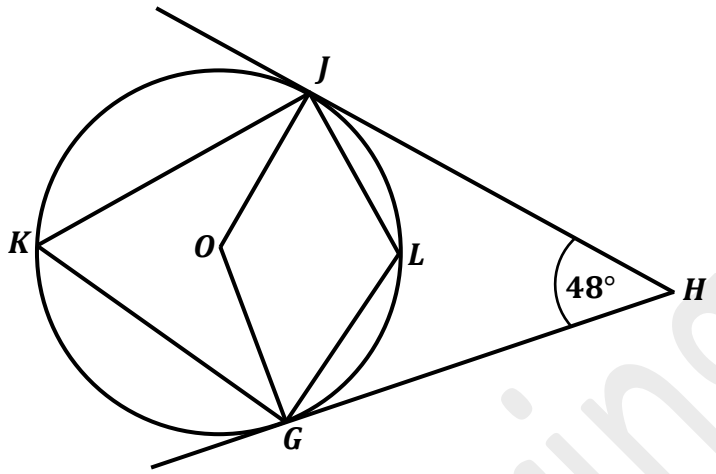

Calculate, giving the reason for each step of your answer the measure of:

(i) $\angle OJH$ [2]

$\angle OJH = 90°$

Since the angle by a tangent to a circle and a radius, at the point of contact, is always a right angle (90°).

(ii) $\angle JOG$ [2]

$\angle JOG$ and $\angle JHG$ are supplementary (add up to 180°)

$\therefore \angle JOG = 180° - 48°$

$= 132°$

Kerwin Springer

(iii) $\angle JKG$ [2]

The angle at the circumference is half the angle at the centre standing on the same arc.

$$\therefore \angle JKG = \frac{\angle JOG}{2}$$

$$= \frac{132°}{2}$$

$$= 66°$$

(iv) $\angle JLG$ [2]

The opposite angles of a cyclic quadrilateral are supplementary.

$$\therefore \angle JLG = 180° - 66°$$

$$= 114°$$

Total: 15 marks

Kerwin Springer

11. (a)(i) Write the following equations

$3x + 2y = -1$

$5x + 4y = 6$

in the form $AX = B$, where A, X and B are matrices. [2]

$3x + 2y = -1$ ...Equation 1

$5x + 4y = 6$ ...Equation 2

Re-writing in matrix form:

$\begin{pmatrix} 3 & 2 \\ 5 & 4 \end{pmatrix}\begin{pmatrix} x \\ y \end{pmatrix} = \begin{pmatrix} -1 \\ 6 \end{pmatrix}$

Which is of the form

$AX = B$

Where:

$A = \begin{pmatrix} 3 & 2 \\ 5 & 4 \end{pmatrix}, X = \begin{pmatrix} x \\ y \end{pmatrix}$ and $B = \begin{pmatrix} -1 \\ 6 \end{pmatrix}$

Kerwin Springer

(ii) Use a matrix method to solve for x and y. [4]

$3x + 2y = -1$ ...Equation 1

$5x + 4y = 6$ ...Equation 2

In matrix form,

$$\begin{pmatrix} 3 & 2 \\ 5 & 4 \end{pmatrix}\begin{pmatrix} x \\ y \end{pmatrix} = \begin{pmatrix} -1 \\ 6 \end{pmatrix}$$

Since $A = \begin{pmatrix} 3 & 2 \\ 5 & 4 \end{pmatrix}$,

$$\det A = (3 \times 4) - (2 \times 5)$$

$$= 12 - 10$$

$$= 2$$

$$adj\ A = \begin{pmatrix} 4 & -2 \\ -5 & 3 \end{pmatrix}$$

$$A^{-1} = \frac{1}{\det A} \times\ adj\ A$$

$$= \frac{1}{2}\begin{pmatrix} 4 & -2 \\ -5 & 3 \end{pmatrix}$$

$$= \begin{pmatrix} 2 & -1 \\ -\frac{5}{2} & \frac{3}{2} \end{pmatrix}$$

Kerwin Springer

Now, we can multiply both sides of the equation by A^{-1}:

$$A^{-1} \times A \times X = A^{-1} \times B$$

$$\begin{pmatrix} 2 & -1 \\ -\frac{5}{2} & \frac{3}{2} \end{pmatrix} \begin{pmatrix} 3 & 2 \\ 5 & 4 \end{pmatrix} \begin{pmatrix} x \\ y \end{pmatrix} = \begin{pmatrix} 2 & -1 \\ -\frac{5}{2} & \frac{3}{2} \end{pmatrix} \begin{pmatrix} -1 \\ 6 \end{pmatrix}$$

NOTE: A matrix multiplied by its inverse gives the identity matrix.

$$\begin{pmatrix} x \\ y \end{pmatrix} = \begin{pmatrix} 2 & -1 \\ -\frac{5}{2} & \frac{3}{2} \end{pmatrix} \begin{pmatrix} -1 \\ 6 \end{pmatrix}$$

$$\begin{pmatrix} x \\ y \end{pmatrix} = \begin{pmatrix} (2 \times -1) + (-1 \times 6) \\ \left(-\frac{5}{2} \times -1\right) + \left(\frac{3}{2} \times 6\right) \end{pmatrix}$$

$$\begin{pmatrix} x \\ y \end{pmatrix} = \begin{pmatrix} -8 \\ \frac{23}{2} \end{pmatrix}$$

$\therefore x = -8$ and $y = \frac{23}{2}$

Kerwin Springer

(b) The diagram below shows two position vectors $\overrightarrow{OR}$ and $\overrightarrow{OS}$ such that $R(6, 2)$ and $S(-4, 3)$.

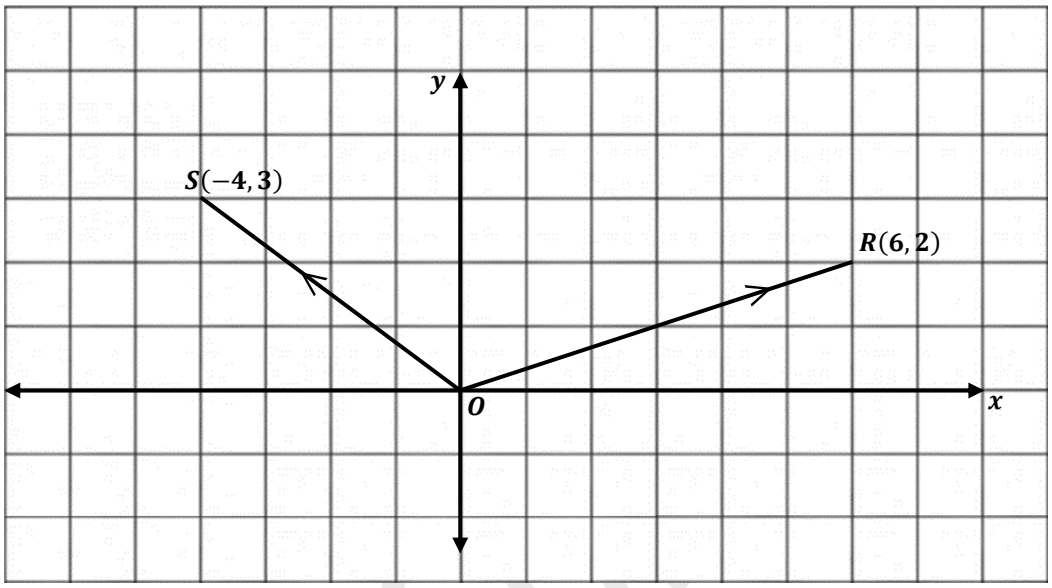

Write as a column vector in the form $\begin{pmatrix} x \\ y \end{pmatrix}$:

(i) $\overrightarrow{OR}$ [1]

$\overrightarrow{OR} = \begin{pmatrix} 6 \\ 2 \end{pmatrix}$

(ii) $\overrightarrow{OS}$ [1]

$\overrightarrow{OS} = \begin{pmatrix} -4 \\ 3 \end{pmatrix}$

Kerwin Sp

(iii) $\overrightarrow{SR}$ [2]

$$\overrightarrow{SR} = \overrightarrow{SO} + \overrightarrow{OR}$$

$$= -\begin{pmatrix} -4 \\ 3 \end{pmatrix} + \begin{pmatrix} 6 \\ 2 \end{pmatrix}$$

$$= \begin{pmatrix} 4 \\ -3 \end{pmatrix} + \begin{pmatrix} 6 \\ 2 \end{pmatrix}$$

$$= \begin{pmatrix} 10 \\ -1 \end{pmatrix}$$

(iv) Find $|\overrightarrow{OS}|$ [1]

$$\overrightarrow{OS} = \begin{pmatrix} -4 \\ 3 \end{pmatrix}$$

$$|\overrightarrow{OS}| = \sqrt{(-4)^2 + (3)^2}$$

$$= \sqrt{25}$$

$$= 5 \ units$$

(v) Given that $OT = \begin{pmatrix} 2 \\ 5 \end{pmatrix}$, prove that $OSTR$ is a parallelogram. [4]

$$\overrightarrow{OR} = \begin{pmatrix} 6 \\ 2 \end{pmatrix}, \ \overrightarrow{OS} = \begin{pmatrix} -4 \\ 3 \end{pmatrix}, \ \overrightarrow{OT} = \begin{pmatrix} 2 \\ 5 \end{pmatrix}$$

To prove OSTR is a parallelogram, we can show that opposite sides are equal and parallel.

Kerwin Springer

$\overrightarrow{ST} = \overrightarrow{OT} - \overrightarrow{OS}$

$= \begin{pmatrix} 2 \\ 5 \end{pmatrix} - \begin{pmatrix} -4 \\ 3 \end{pmatrix}$

$= \begin{pmatrix} 6 \\ 2 \end{pmatrix}$

Since $\overrightarrow{OR} = \begin{pmatrix} 6 \\ 2 \end{pmatrix}$ then,

$\overrightarrow{ST} = \overrightarrow{OR}$ [This means that ST and OR are equal and parallel]

$\overrightarrow{TR} = \overrightarrow{OR} - \overrightarrow{OT}$

$= \begin{pmatrix} 6 \\ 2 \end{pmatrix} - \begin{pmatrix} 2 \\ 5 \end{pmatrix}$

$= \begin{pmatrix} 4 \\ -3 \end{pmatrix}$

Since $\overrightarrow{OS} = \begin{pmatrix} -4 \\ 3 \end{pmatrix}$, then $\overrightarrow{SO} = \begin{pmatrix} 4 \\ -3 \end{pmatrix}$

$\overrightarrow{TR} = \overrightarrow{SO}$ [This means that TR and SO are equal and parallel]

$\therefore$ Since the opposite sides are equal and parallel, $OSTR$ is a parallelogram.

Total: 15 marks

END OF TEST

IF YOU FINISH BEFORE TIME IS CALLED, CHECK YOUR WORK ON THIS TEST.

Best Online Lessons in the Caribbean
WhatsApp **+1868-310-1306** for more information

Kerwin Springer